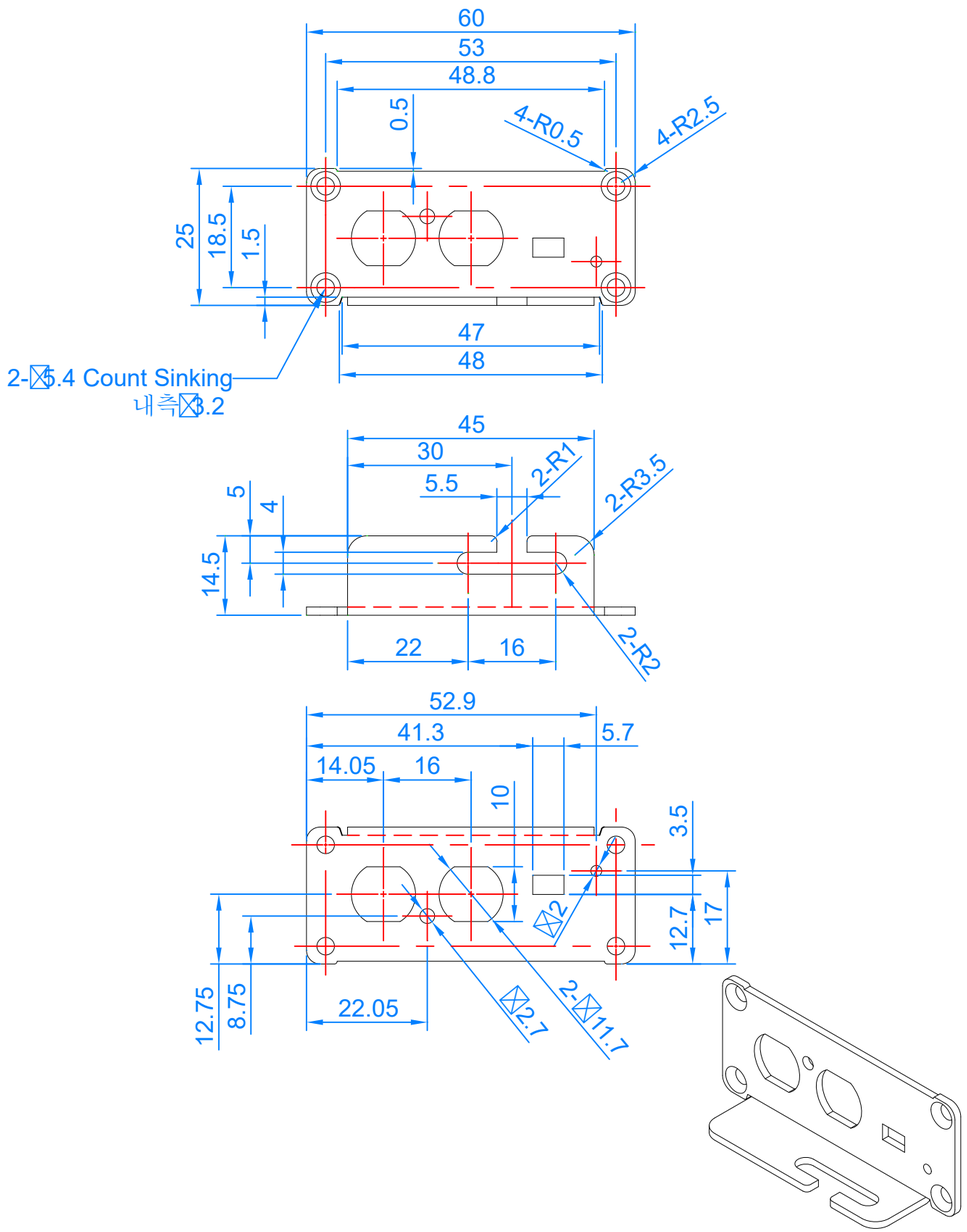
60
53
48.8
0.5
4-R0.5
4-R2.5
25
18.5
1.5
47
48
2-⊠5.4 Count Sinking
내측⊠3.2
45
30
5.5
2-R1
2-R3.5
5
4
14.5
22
16
2-R2
52.9
41.3
5.7
14.05
16
10
3.5
⊠2
12.7
17
12.75
8.75
22.05
⊠2.7
2-⊠11.7

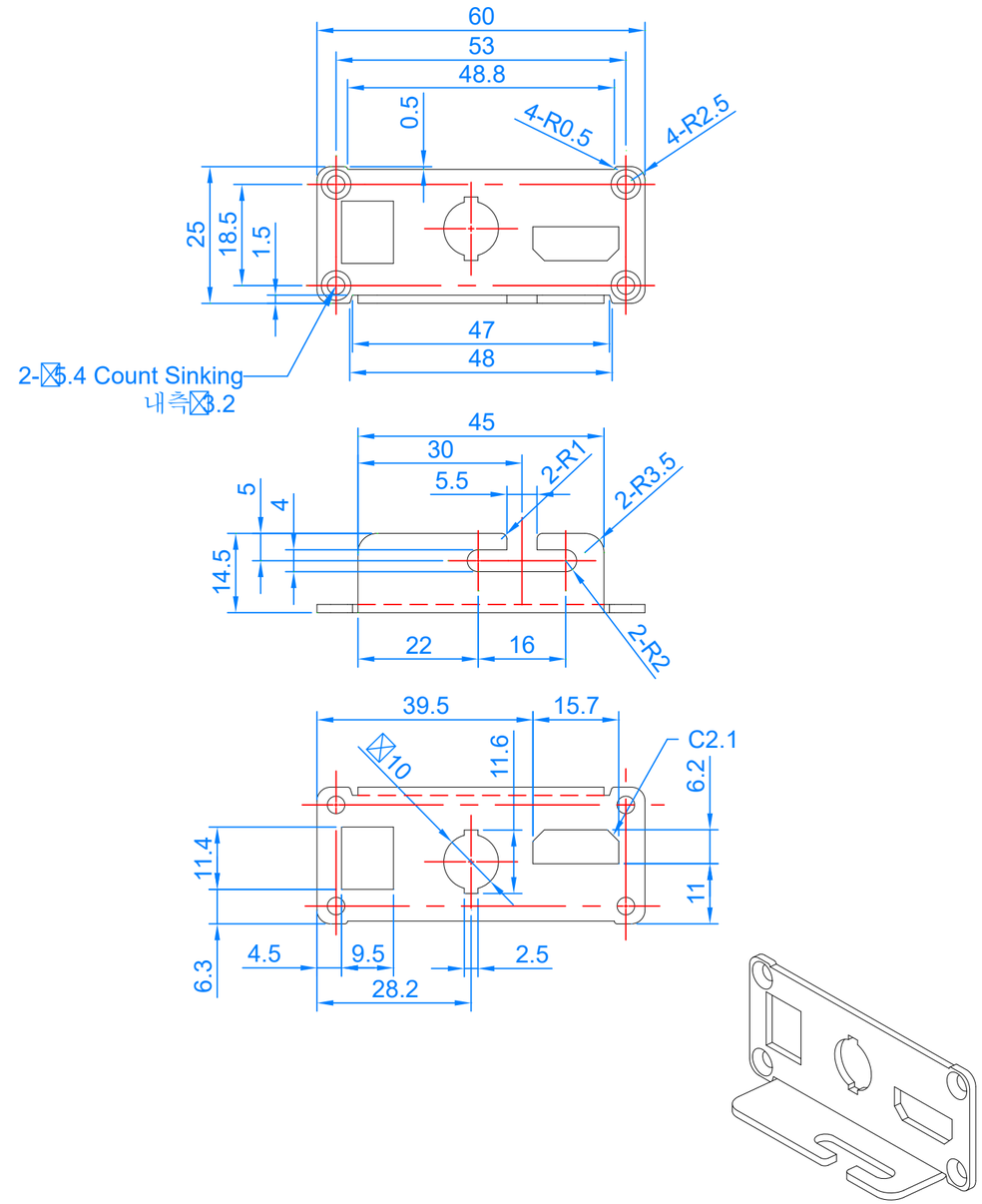
60
53
48.8
0.5
4-R0.5
4-R2.5
25
18.5
1.5
47
48
2-⊠5.4 Count Sinking
내측⊠3.2
45
30
5.5
2-R1
2-R3.5
5
4
14.5
22
16
2-R2
39.5
15.7
C2.1
⊠10
11.6
6.2
11.4
11
6.3
4.5
9.5
2.5
28.2